PROPOSED LOCATION OF BUILD OUTS

Scale 1:500

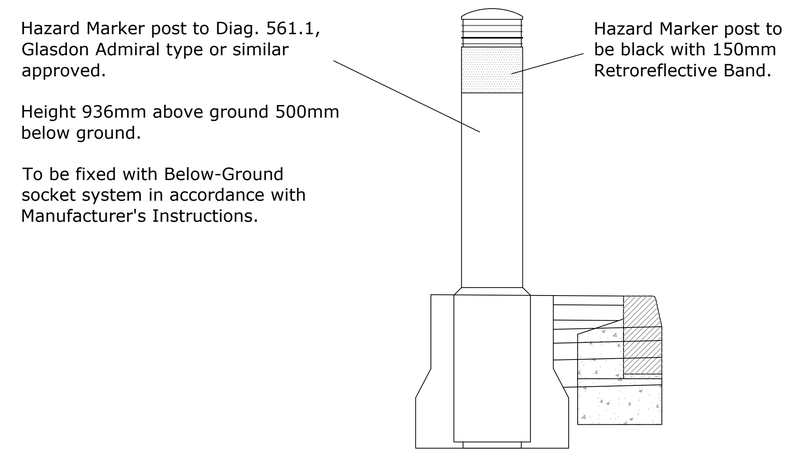

TYPICAL HAZARD MARKER AT PROPOSED BUILD OUT.

Scale 1:10

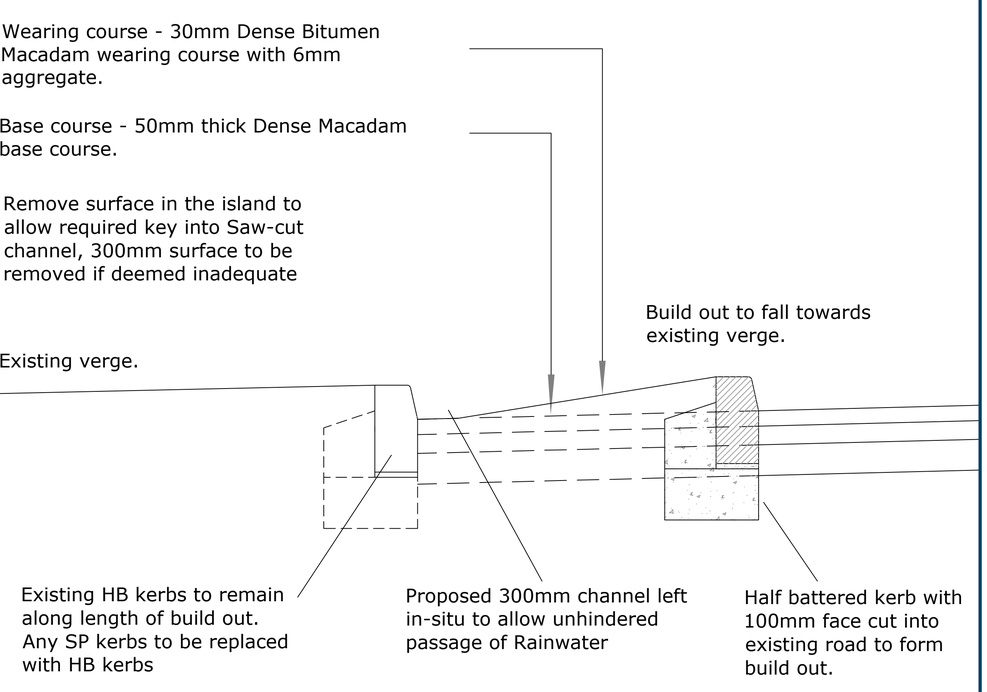

TYPICAL SECTION THROUGH PROPOSED BUILD OUT ADJACENT TO VERGE.

Scale 1:10

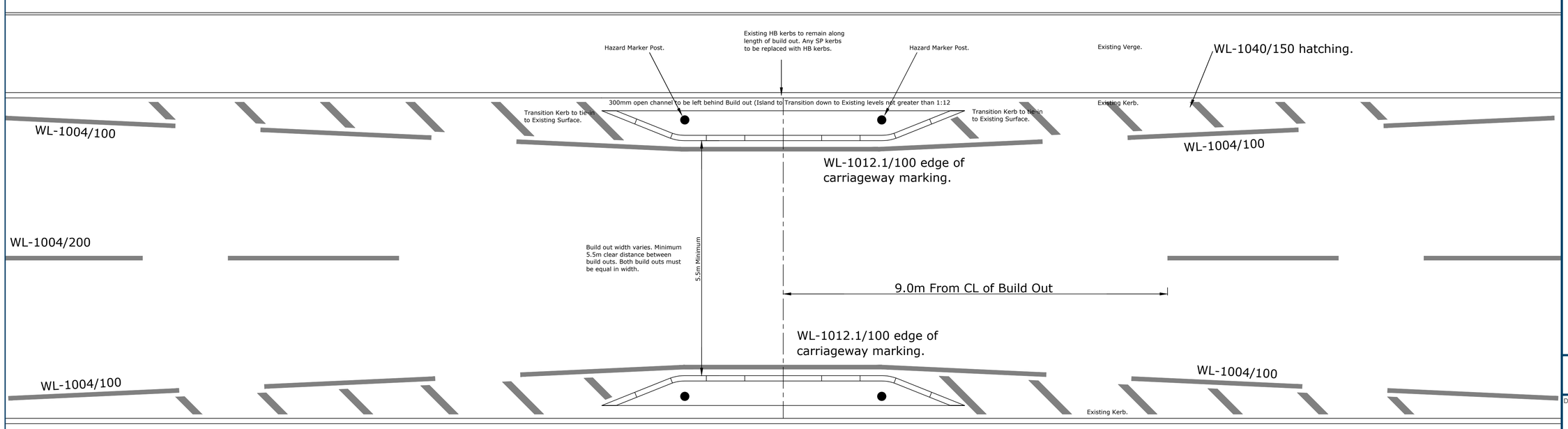

PROPOSED KERB LAYOUT ADJACENT TO VERGE.

PROPOSED WHITE LINING & ROAD MARKINGS.

Scale 1:50

DEVELOPMENT
EDGEHILL PARK PHASE 4

DRAWING
S278 PLAN

DRAWN BY	MO	DATE	10-02-2023
CHECKED BY	-	SCALE	VARIOUS @A0
DWG PACK	DRAWING NUMBER		REVISION
CON.	20095.90.9.S278P		C1

Revisions	Notes	Date
REV.	COMMENTS	XX/XX/XXXX
C1	Initial construction issue.	27/02/2024

©Story Homes
Story House, Lords Way, Kingmoor Business Park, Carlisle, CA6 4SL