NOTES

OTHER SIZES AVAILABLE UPON REQUEST

X No. REQUIRED

GLASS SPEC:

OUTER : 4mm CLEAR, NEUTRAL OR BLUE TOUGHENED GLASS
CAVITY : 16mm ARGON FILLED + WARM EDGE SPACER
INNER : 4mm CLEAR, NEUTRAL OR BLUE TOUGHENED GLASS
+ LOW E COATING
SELF CLEAN AVAILABLE

LIGHT TRANSMISSION = X % (Spec Dependant)
CENTRE PANE U VALUE = 1.1 W/m².K
SOLAR G VALUE = X % (Spec Dependant)
ACOUSTIC REDUCTION = 32 Rw dB

FRAME POWDER COAT STANDARD COLOURS:
RAL 9010 WHITE
RAL 9005 JET BLACK
RAL 7016 ANTHRACITE GREY

DUAL COLOUR BLACK EXTERNAL / WHITE INTERNAL
DUAL COLOUR GREY EXTERNAL / WHITE INTERNAL

XXXX = SIZE NOT AVAILABLE

LINEAR MEASUREMENT IN MM

WEIGHT IN KG

HEIGHTS SHOWN ARE APPROXIMATE

Stock Size = Rooflight Order Size			
Span	Length	Weight	Height
1600	1600	91	498
1600	1800	99	498
1600	2000	108	498
1600	2200	117	498
1600	2500	131	498
1600	3000	153	498

Stock Size = Rooflight Order Size			
Span	Length	Weight	Height
1500	1500	82	474
XXXX	XXXX	-	-
1500	1800	94	474
1500	2000	103	474
1500	2200	111	474
1500	2500	124	474
1500	3000	145	474

Stock Size = Rooflight Order Size			
Span	Length	Weight	Height
1400	1400	73	451
XXXX	XXXX	-	-
1400	1600	81	451
1400	1800	89	451
1400	2000	97	451
1400	2200	105	451
1400	2500	117	451
1400	3000	137	451

Stock Size = Rooflight Order Size			
Span	Length	Weight	Height
1200	1200	58	404
1200	1400	65	404
1200	1500	69	404
1200	1600	72	404
1200	1800	79	404
1200	2000	86	404
1200	2200	94	404
1200	2500	104	404
1200	3000	122	404

Stock Size = Rooflight Order Size			
Span	Length	Weight	Height
1000	1000	45	358
1000	1200	51	358
1000	1400	57	358
1000	1500	60	358
1000	1600	63	358
1000	1800	69	358
1000	2000	76	358
1000	2200	82	358
1000	2500	91	358
1000	3000	107	358

Stock Size = Rooflight Order Size			
Span	Length	Weight	544
1800	1800	109	544
1800	2000	119	544
1800	2200	129	544
1800	2500	143	544
1800	3000	168	544

Stock Size = Rooflight Order Size			
Span	Length	Weight	Height
2000	2000	130	591
2000	2200	141	591
2000	2500	157	591
2000	3000	183	591

Stock Size = Rooflight Order Size			
Span	Length	Weight	Height
2200	2200	153	637
2200	2500	170	637
2200	3000	204	637

Stock Size = Rooflight Order Size			
Span	Length	Weight	Height
2500	2500	190	707
2500	3000	228	707

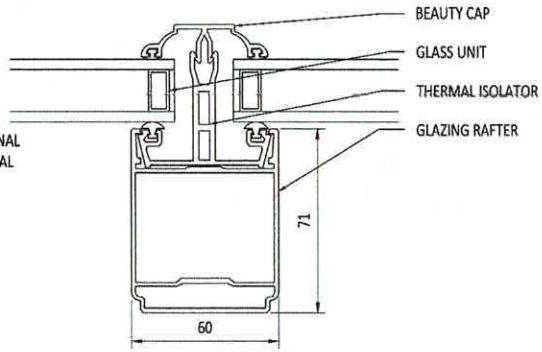

SECTION B-B

EXTERNAL KERB SIZE = ROOFLIGHT ORDER SIZE
IF YOU ORDER 1400 x 1800 MAKE THE EXTERNAL KERB 1388 x 1788. TO GET THE INTERNAL OPENING SIZE, SIMPLY DEDUCT THE KERB THICKNESSES OFF THE EXTERNAL DIMS.

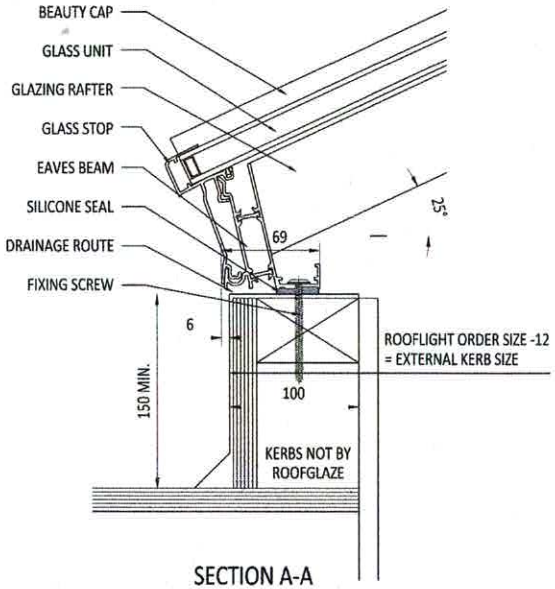

SECTION A-A

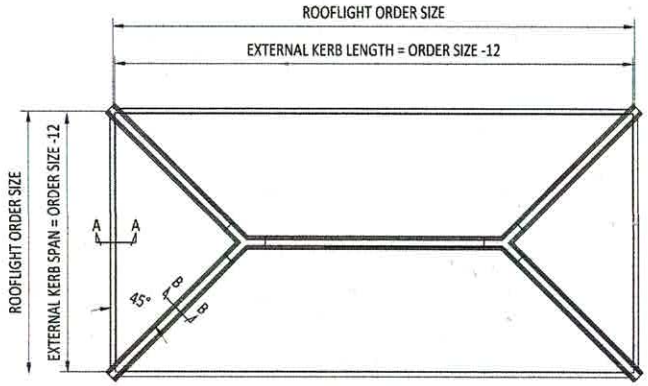

LANTERN PLAN VIEW

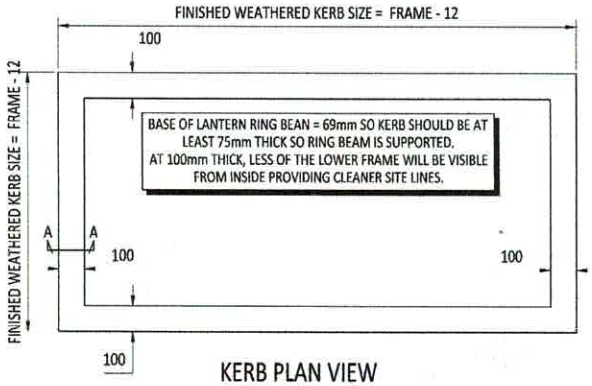

KERB PLAN VIEW

IF IN DOUBT ASK DO NOT SCALE

SKYWAY™

IT IS THE RESPONSIBILITY OF THE KERB DESIGNER TO ENSURE THE KERB WILL BE STRUCTURALLY ADEQUATE TO HOLD THE ROOFLIGHT. KERBS SHOWN ON THESE DRAWINGS ARE FOR ILLUSTRATION PURPOSES ONLY.

The manufacturer would advise an installation with a minimum pitch of 5° for rooflight units to minimize water pooding. Whilst the product can be installed flat without detriment to the warrantee, the manufacturer cannot be held responsible for any excessive pooding of water to the surface of the rooflight, post installation, if installed without an adequate fall, larger units may require a greater fall. The final decision on amount of fall required must be made by the client and relayed to the installer.

THIS DRAWING MUST NOT BE COPIED OR PASSED TO A THIRD PARTY WITHOUT WRITTEN CONSENT FROM THE MANUFACTURER.

CHECKED	C. MORGAN	
DATE	18-10-2017	
DRAWN	D. PUGH	
DATE	18-10-2017	

TOLERANCE UNLESS OTHERWISE STATED ±5
DIMENSIONS IN MM
SCALE 1:X @ A1

MATERIAL ALUMINIUM + GLASS
FINISH POLYESTER POWDER COATING COLOUR T.B.C.

REV	AMENDMENTS	SIGNED	CHECKED	DATE

Rooflglaze Rooflights Ltd.
11 Howard Road, Eaton Socon,
St Neots, Cambs. PE19 8ET
Telephone 01480 474797

DRAWING No. RGR-900-10
SHEET 1

TITLE. KORNICHE LANTERN

REV

SIZE A1

ROOFGLAZE
Lighting by nature