This drawing is copyright and may not be reproduced in whole or part without written authority.
The Harris Group Ltd does not accept liability for any deviation from our drawings or specification.
Do not scale off this drawing.

REV	DATE	DESCRIPTION	DRW	CHK
C01	10.03.26	Construction Issue	GH	SSL
C02	18.05.26	Totem sign revised to 7m	GH	SSL
C03	22.07.26	Signage updated	SSL	GH
C04	28.07.26	Submission Issue	RG	SSL

DOUBLE FACED DOUBLE POST MOUNTED SIGN

- 2no: 2470 x 2070mm (8507 LED Type) fixed back to back on central support "box".
- Central support "box" to be supplied and installed by sign contractor to match sign exactly in size and profile and to be aluminium and finished as follows: RAL 7016 Anthracite Grey
- Standard Site Entrance Sign 6.000m from ground level to top of sign and posts. 3530 from ground level to underside of sign.
- Steel sign posts by sign contractor or canopy contractor, galvanised and coated as follows: RAL 7016 Anthracite Grey
- High quality fabricated aluminium signcases, finished as follows: RAL 7016 Anthracite Grey
- Signs fully internally illuminated by LED.
- Supply cable to be connected to signage by signage contractor. Underground cables by electrical contractor.
- No cables or junction boxes to be visible above ground level or fixed to sign.
- Lower 'showcase' signs by signage contractor including fixing 'wings' bolted to posts.
- Steel materials and specific grades - Hollow sections in accordance with BS EN 10210-1 & BS EN 10219-1.
- Plates in accordance with BS EN 10025-1.
- Bolt grades in accordance with BS EN 14399-1.
- Galvanising in accordance with BS EN 1461.
- Powder coating in accordance with BS EN 13438.
- All fabrication work to be in accordance with BSEN 1090-2.
- Work to be completed to execution class 2.
- The weld specification on each individual weld to be 6mm fillet/butt weld - single pass - multi pass.

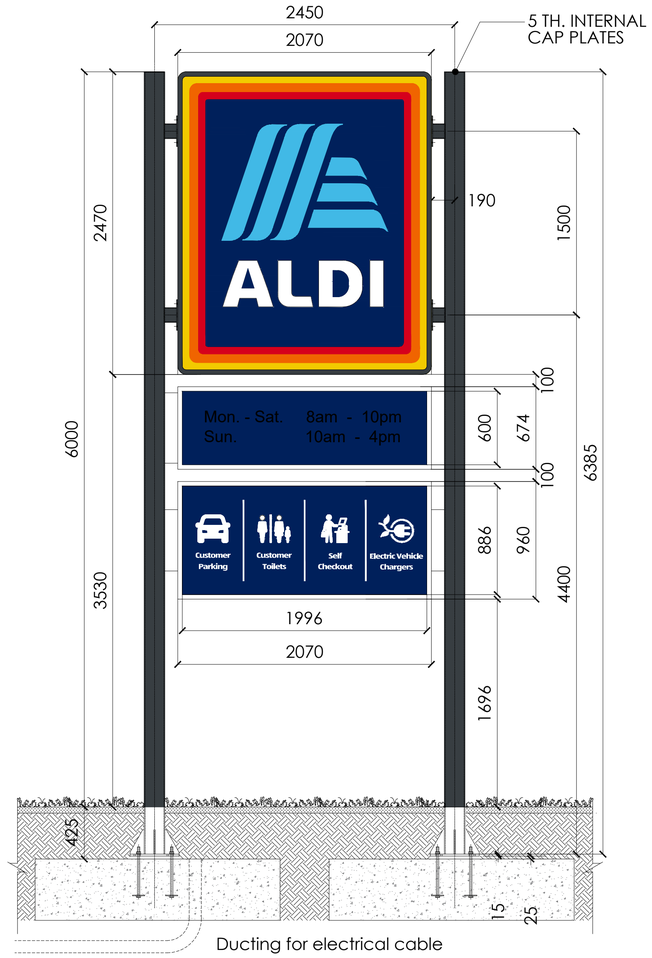

ELEVATION OF STANDARD TOTEM SIGN

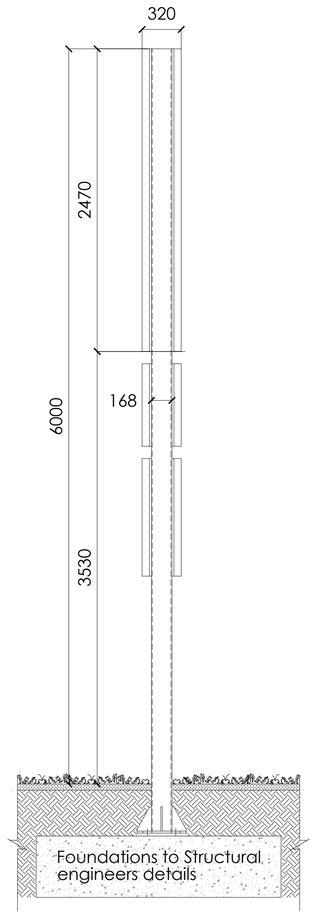

SIDE ELEVATION

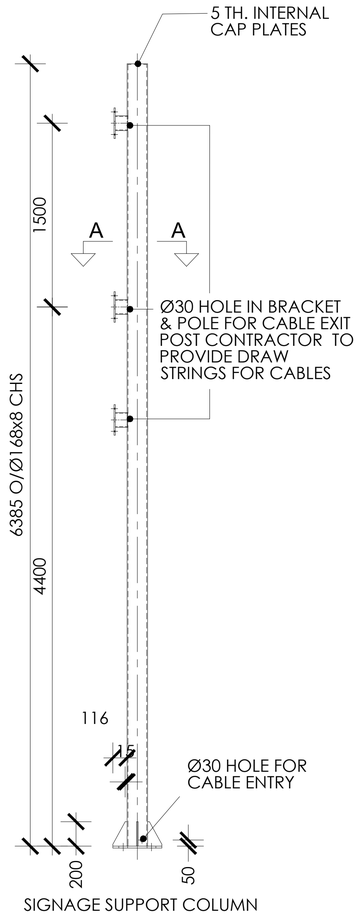

SIGNAGE SUPPORT COLUMN

LOW-LEVEL POST MOUNTED SIGN (DOUBLE SIDED TOTEM)

* 2no: 1235 x 1035mm (8507 LED Type) fixed back to back on central support "box".
* Central support "box" to be supplied and installed by sign contractor to match sign exactly in size and profile and to be aluminium and finished as follows: RAL 7016 Anthracite Grey.
* Site Sign 2.400m from ground level to top of sign and posts. 1.165m from ground level to underside of sign.
* Steel sign posts by sign contractor or canopy contractor, galvanised and coated as follows: RAL 7016 Anthracite Grey.
* High quality fabricated aluminium sign-cases, finished as follows: RAL 7016 Anthracite Grey panel is polycarbonate with screen-printed 5 colour foil logo.
* No cables or junction boxes to be visible above ground level or fixed to sign.
* Lower 'showcase' sign by signage contractor including fixing 'wings' bolted to posts.
* Fabrication standards as noted above.

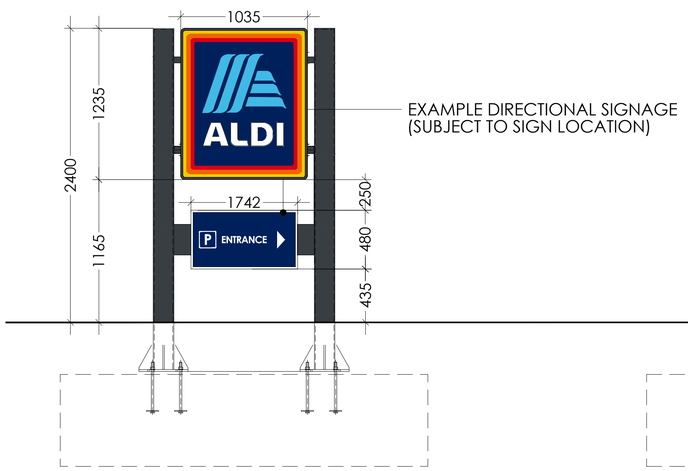

FRONT ELEVATION

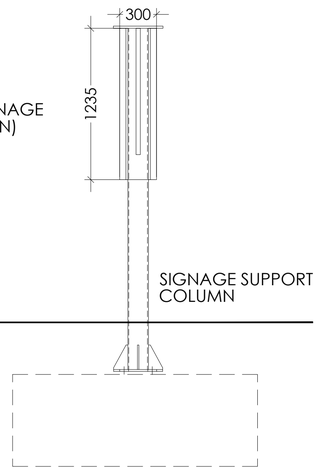

SIDE ELEVATION

INTERNALLY ILLUMINATED FASCIA SIGN

SIGN 03
SCALE 1:25

NON-ILLUMINATED VINYL SIGN

SIGN 04
SCALE 1:25

0 250 500 1250mm
Scale 1:25

THIS DRAWING MUST NOT BE SCALED AND ALL DIMENSIONS ARE TO BE CHECKED ON SITE BEFORE WORK IS COMMENCED. THE DESIGN AND DRAWINGS REMAIN THE PROPERTY OF THE HARRIS PARTNERSHIP AND MAY NOT BE REPRODUCED WITHOUT THEIR PERMISSION. ANY DISCREPANCIES ARE TO BE REPORTED IMMEDIATELY TO THE CONSULTANTS. ALL INFORMATION SHOWN ON THE DRAWING IS SUBJECT TO OBTAINING THE NECESSARY STATUTORY CONSENTS.

Client
ALDI - Aldi Stores Ltd.

Project Title
ALDI FOODSTORE

Project Address
Wyndham Terrace
Egremont

Drawing Title
SIGNAGE DETAILS

Job No.	Originator	Functional	Spatial	Form	Discipline
79-E1640	THPW	XX	XX	DR	A

Drawing No.	Revision
2014	C04

Drawn	Checked	Date	Scale	Size
GH	SSL	27.07.26	1 : 25	A1

■ 2 St. Johns North, Wakefield, WF1 3QA t. 01924 291800
☐ Carvers Warehouse, 77 Dale Street, Manchester, M1 2HG t. 0161 2388555
☐ The Old Rectory, 79 High Street, Newport Pagnell, MK16 8AB t. 01908 215577
☐ 101 London Road, Reading, RG1 5BY t. 0118 9507700
☐ 10 Gees Court, St Christophers Place, London, W1U 1JJ t. 0207 4091215

THP Project No.21341
THE HARRIS PARTNERSHIP
ARCHITECTS
www.harrispartnership.com