PART NAME		MATERIAL	REMARK
FRAME	SIDE RAIL	SPA-H	
	END RAIL	SPA-H	
	CORNER POST	SM50A/SPA-H	
	CROSS MEMBER	SPA-H	
PANEL	DOOR	SPA-H	
	ROOF	SPA-H	
	SIDE	SPA-H	
	FRONT	SPA-H	
WOODEN FLOOR		APITONG/HARDWOOD	
DOOR LOCKING ROD ASS'Y		"SJ-66M"&"HH-EA/2" TYPE	

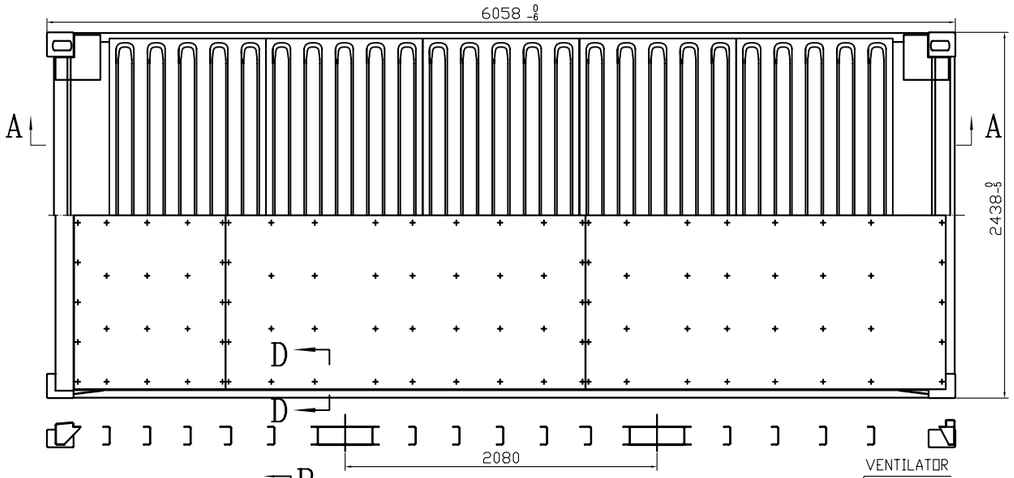

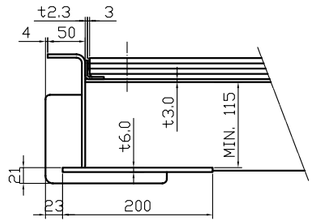

SECTION D-D
1:10

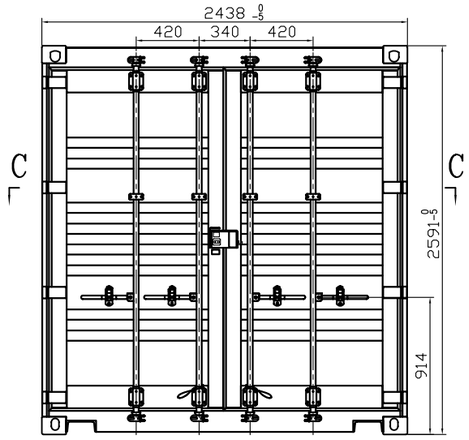

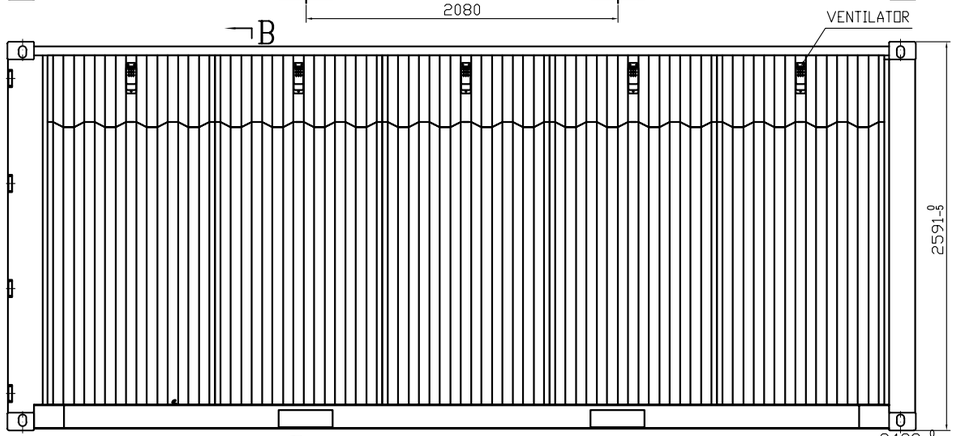

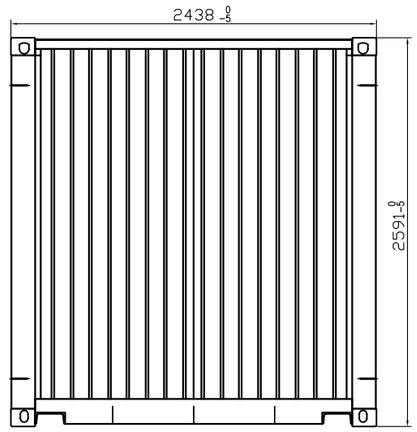

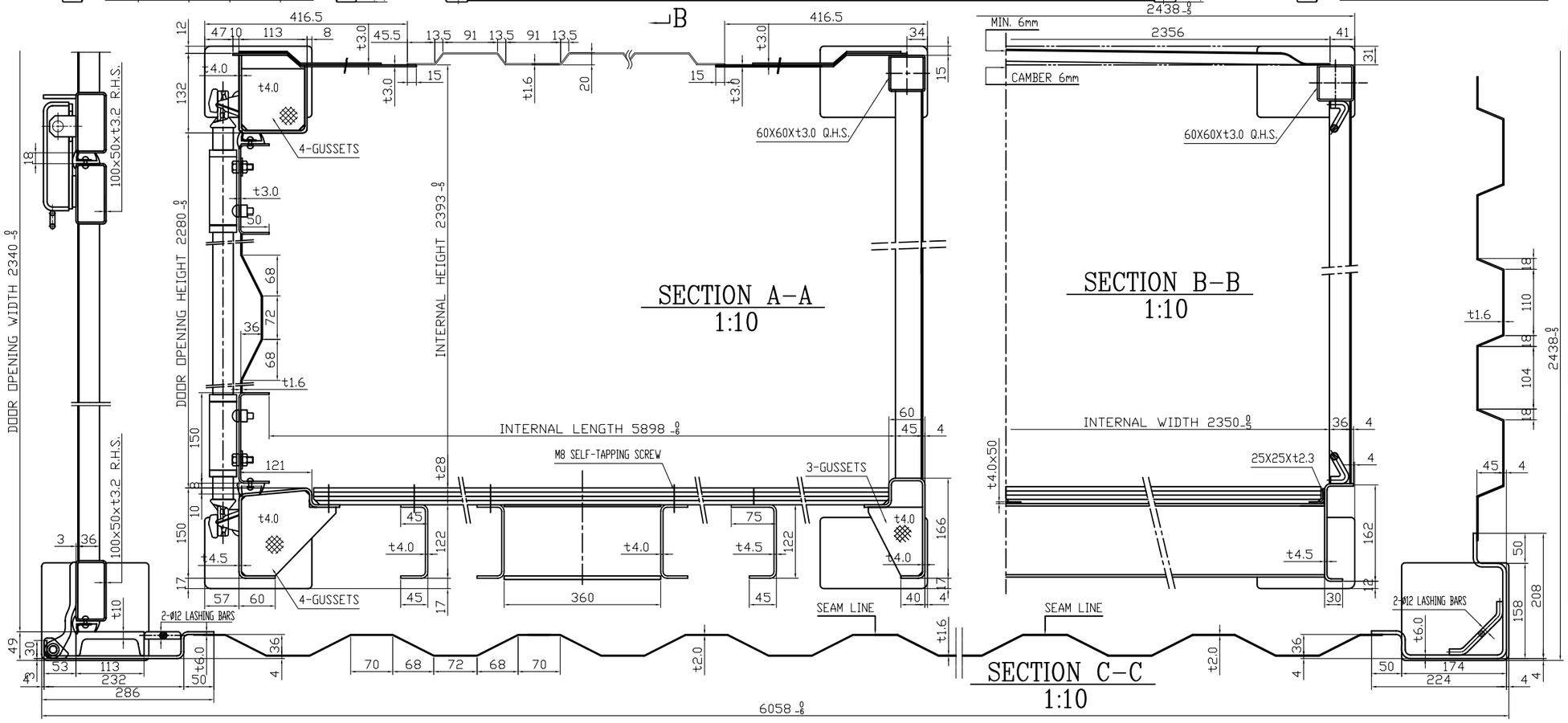

CLASSIFICATION		DIMENSION			
EXTERNAL	LENGTH	6,058	+0 −6mm	19'10 1/2"	+0 −1/4"
	WIDTH	2,438	+0 −5mm	8' 0"	+0 −3/16"
	HEIGHT	2,591	+0 −5mm	8' 6"	+0 −3/16"
INTERNAL	LENGTH	5,898	mm	19' 4 13/64"	
	WIDTH	2,350	mm	7' 8 33/64"	
	HEIGHT	2,393	mm	7'10 3/32"	
DOOR OPENING	WIDTH	2,340	mm	7' 8 1/8"	
	HEIGHT	2,280	mm	7' 5 49/64"	
INTERNAL CUBIC CAPACITY		33.1	CU.m	1,170	CU.ft
MAXIMUM GROSS WEIGHT		30,480	kg	67,200	lb
TARE WEIGHT		2,080	kg	4,585	lb
MAXIMUM PAYLOAD		28,400	kg	62,615	lb
STACKING TEST LOAD(PER POST)		86,400	kg	190,480	lb
FLOOR STRENGTH LOAD		7,260	kg	16,000	lb

DRAWING NO.	DESCRIPTION	REMARK
RXTC-20DBC-100	BASE ASSEMBLY	
RXTC-20DBC-200B	DOOR ASSEMBLY	
RXTC-20DBX-300	ROOF ASSEMBLY	
RXTC-20DBC-400	SIDE ASSEMBLY	R/H:1 L/H:1
RXTC-20DBC-500	FRONT ASSEMBLY	

MARK	Q'TY	REV. FILE NO.	SIGNATURE	DATE

TITLE: GENERAL ASSEMBLY 总图

OWNER: GVCT

TYPE: ISO-1CC 20'x8'x6"

W'T(KG) | SCALE

DESIGNED		APPROVED	
CHECKED		DATE	2010.12.21

DRAWING NO. RXTC-20DBC-000C

Zhangjiagang Kexinongyun Logistic Equipment Co.,LTD.
张家港日新通运物流装备有限公司