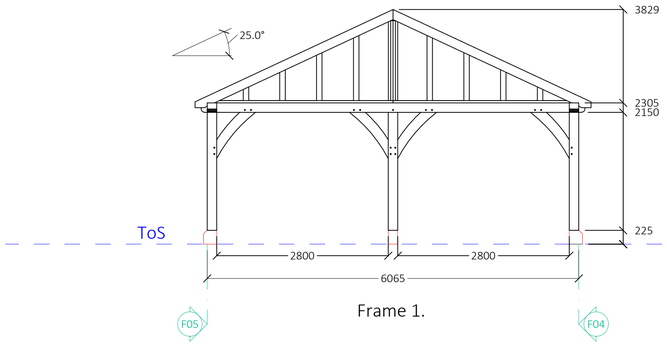

Frame 1.

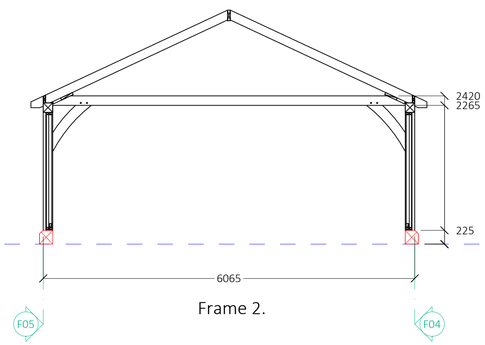

Frame 2.

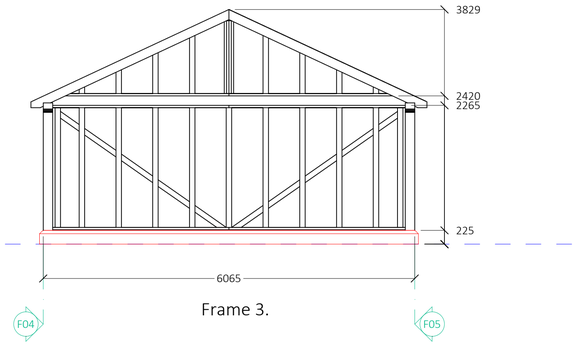

Frame 3.

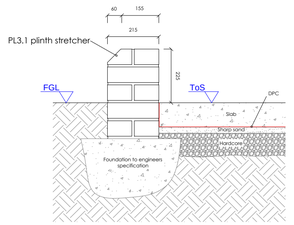

Section through plinth

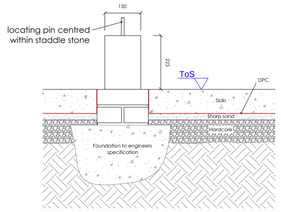

Section through staddle stone

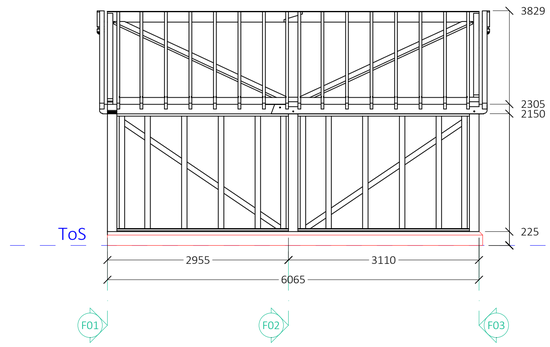

Frame 4.

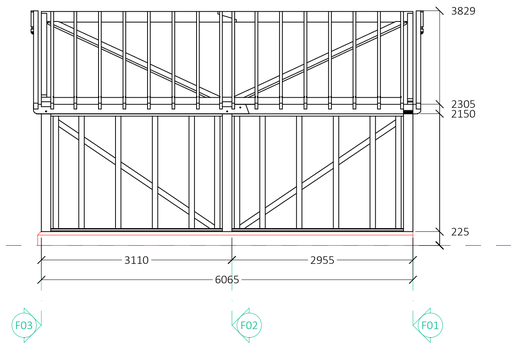

Frame 5.

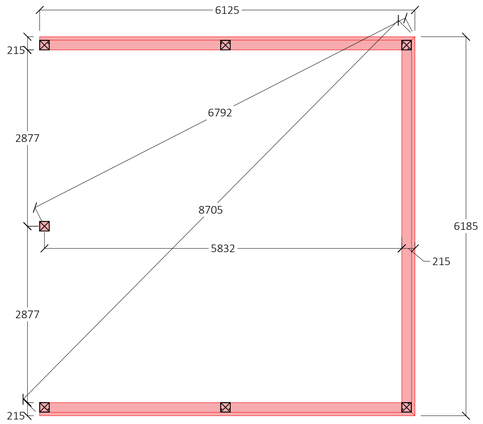

Masonry Plan

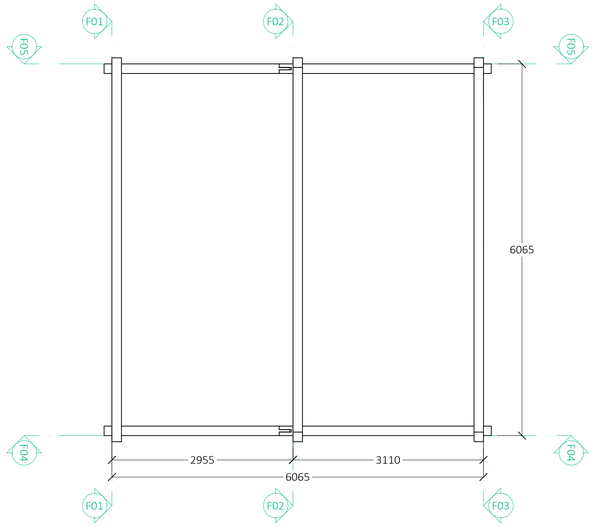

Primary Roof Plan

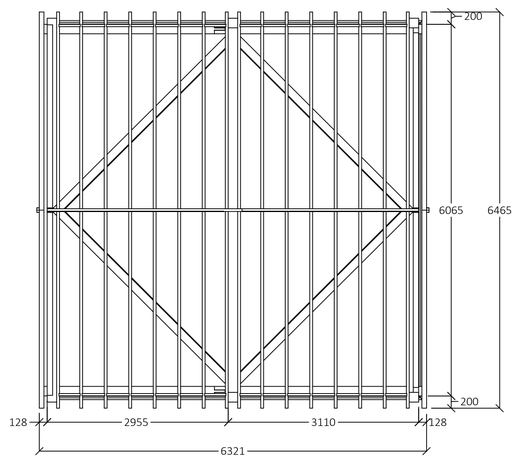

Secondary Roof Plan

OAKWRIGHTS®

DRAWING PRODUCED BY

T.J. Crump Oakwrights Ltd.
The Lakes, Swainshill,
Hereford, HR4 7PU

+44 (0) 1432 353353
enquiries@oakwrights.co.uk

© This drawing, its contents, and all information contained therein is protected by copyright. It may be used once only for its intended purpose under a contract with T J Crump Oakwrights Ltd, but specifically not for any other use or purpose.

Note:
The approved frame and encapsulation drawings supersede any building regulation drawings, planning drawings or any previous drawing issues in overall dimensions, timber sizes, positions of openings within encapsulation and details.

Once the design has been agreed and signed off it will be checked by an independent structural engineer who will provide the necessary structural calculations. The package value will increase whenever the structural engineer requests changes to the frame or encapsulation.

Oak frames are produced using green timbers. As the oak dries, it will shrink by anywhere between 5 - 15% in section, which can cause shakes (cracking) and gaps in some joints. This does not affect the structural integrity of the frame.

Any detail included in the drawings are generic. Please refer to contract appendices for details of Oakwrights responsibilities for the components in this drawing.

Prior to commencing on site erection, all parties must ensure they have read and understood the Oakwrights standard method statement and risk assessment in the Oakwrights site safety file.

As site conditions may change, use of the information provided is at the discretion of the Oakwrights site foreman.

Do not scale from this drawing. All dimensions are to be checked on site.

KEY

BWK	Brickwork	Sw	Softwood by Others
Di	Door Opening - Internal	SWK	Stonework
Dx	Door Opening - External	TH	Tile Hanging
Dsf	Door Opening - Sliding/Folding	TOD	Top of Deck
FG	Face Glazing - External	TOS	Top of Screed
O	Open Space - No Detailing	WW	Wrightwall
P	Infill Panel OW Type 3i	WWN	Wrightwall Natural
Pbs	Panel OW Type 3i - Brick Slips	WR	Wrightroof
SF	Glazed Opening - Sub-frames	WRN	Wrightroof Natural
REN	Render	WB	Weatherboarding

CLIENT
Mr Keighley

SITE ADDRESS
Moss Ghyll
Asby
Workington
Cumbria
CA14 4RP

ISSUE STAMP
TJ CRUMP OAKWRIGHTS LTD
30.06.2020
ISSUED ELECTRONICALLY

APPROVED -
NAME, DATE, SIGNATURE

DEPARTMENT
FRAME & ENCAP DESIGN

TYPE
FRAME,

DRAWING
Frame Drawings

ISSUE STATUS
APPROVAL,

SCALE
1:50 @A1

DRAWN
EI

CHECKED
TG

DATE DRAWN
30.06.20

DWG. NO.
EI .5391.FR.

REV.
0