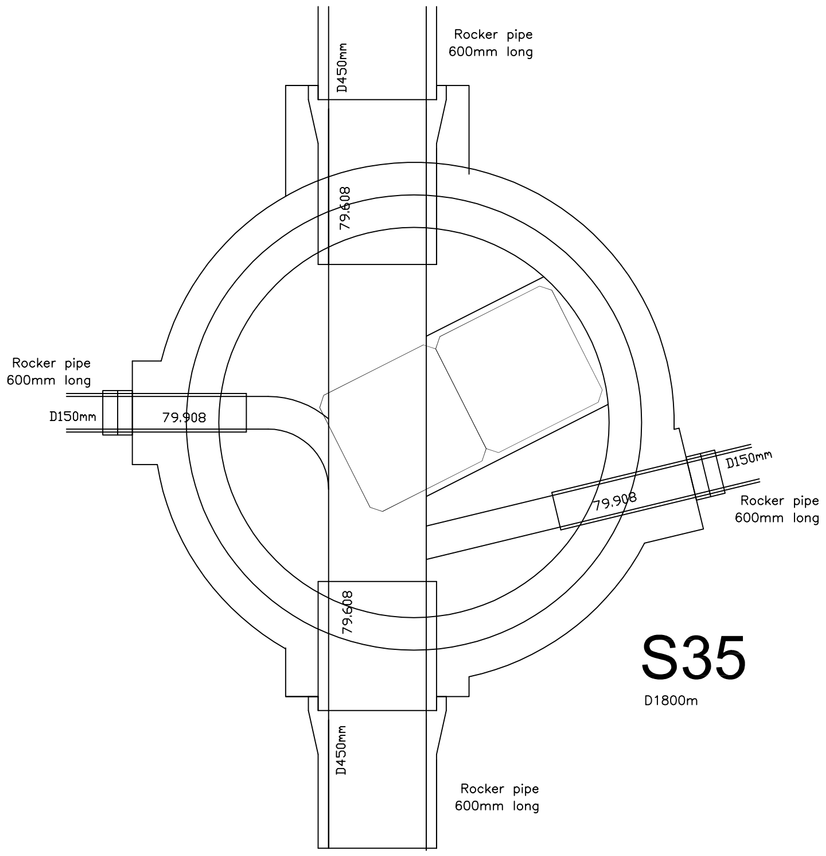

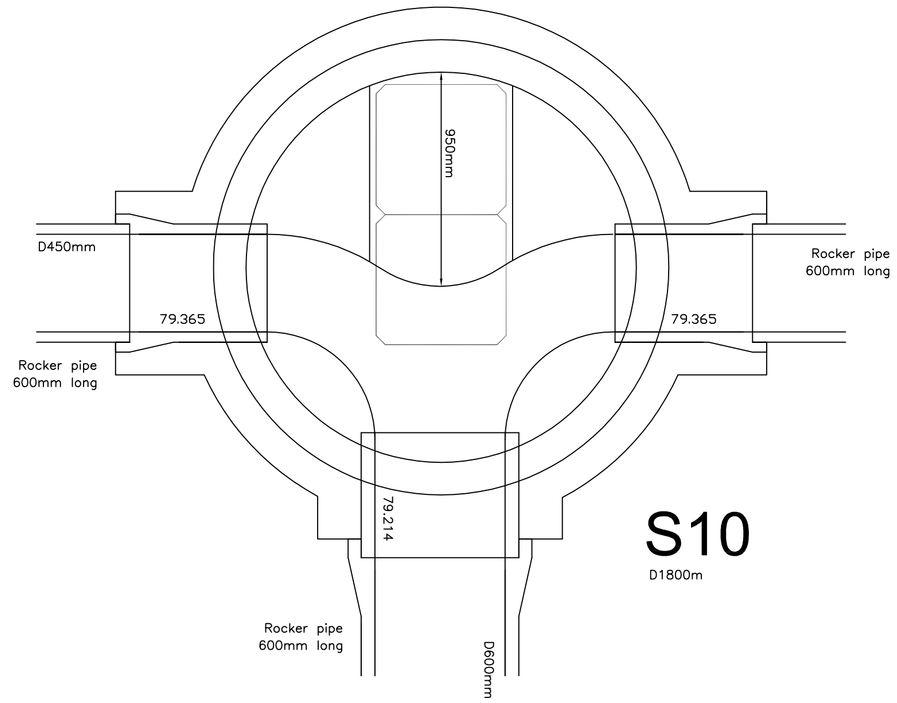

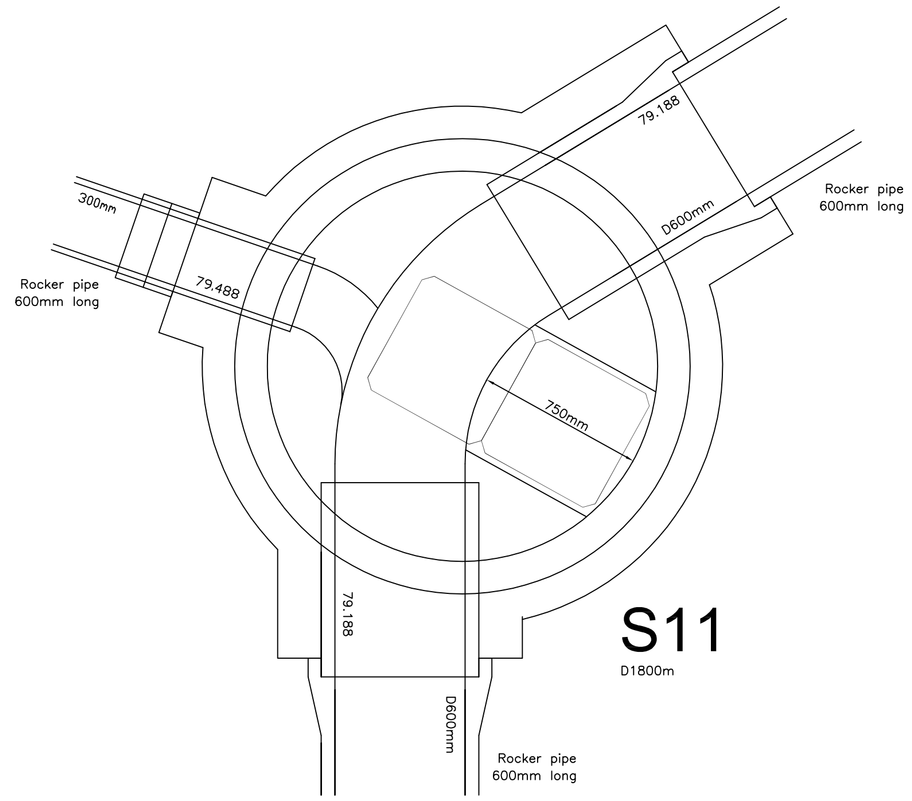

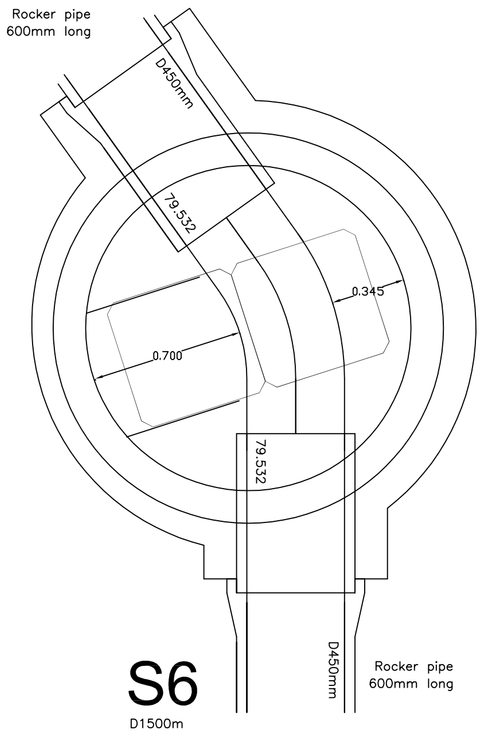

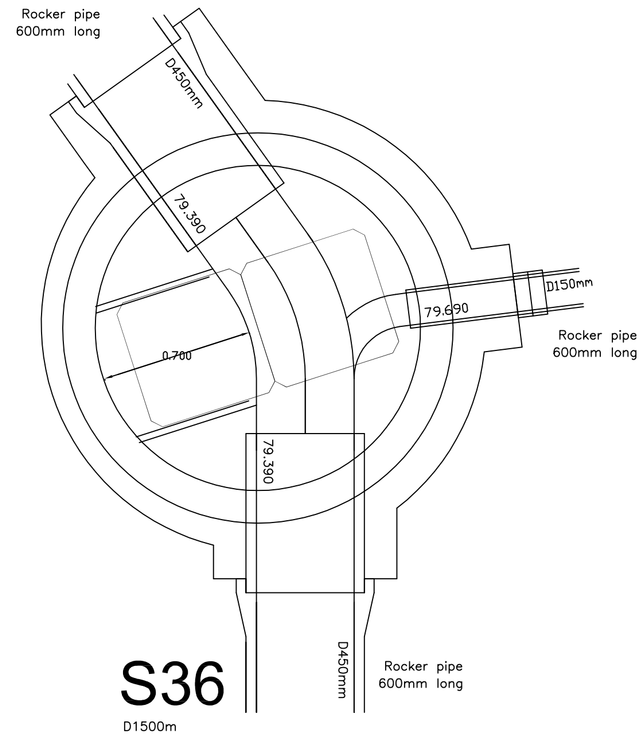

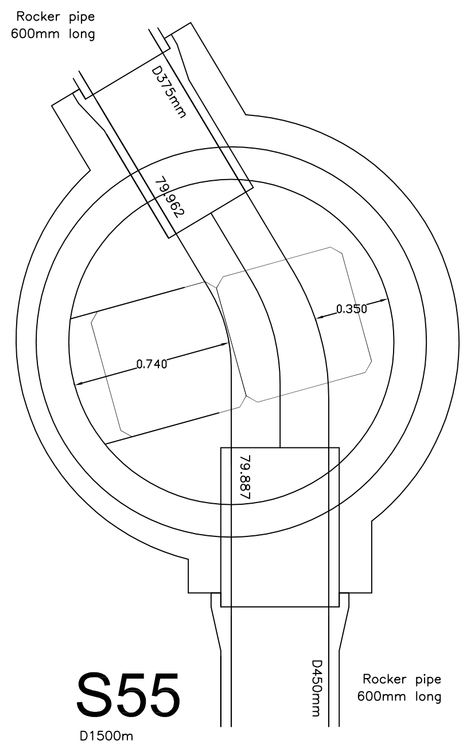

SHALLOW MANHOLES TO BE CONSTRUCTED
AS UNITED UTILITIES STANDARD DETAIL
STND/19/004A

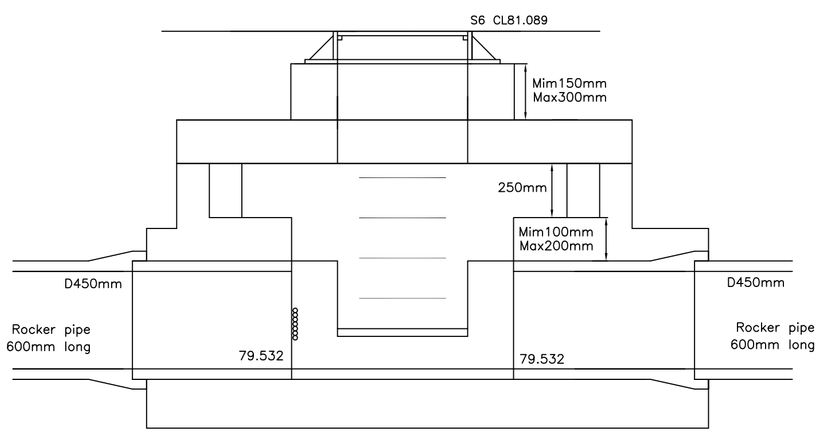

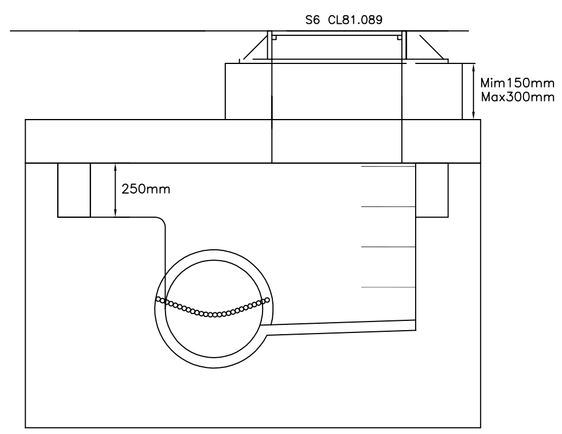

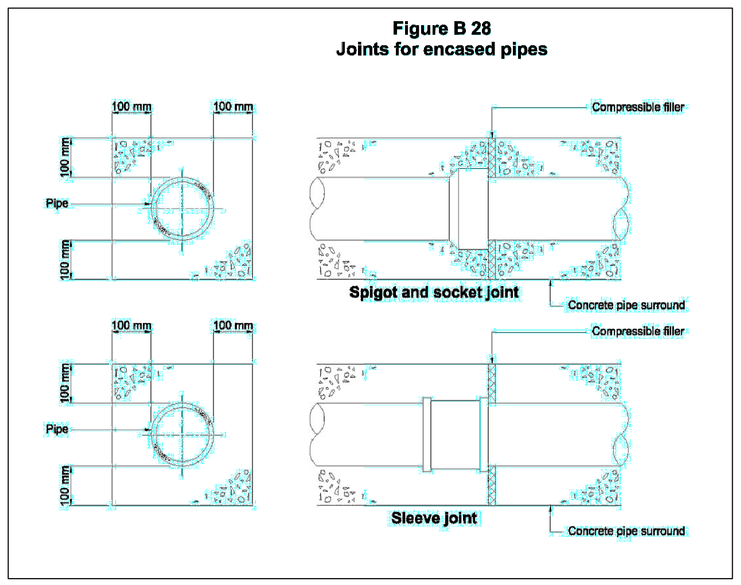

R.A.B. ENGINEERING DESIGN LTD

12 BERRY HOLME CLOSE
SHEFFIELD S35 1AB
TEL.(0114)2464871

High Grange Developments Ltd

Mill Hill, Cleator Moor
Plots 15-64 & 80-82
Shallow Manhole detail

DRAWN BY	rab
SCALE	DATE Aug23
DRAWING No 1083-12-11	REV .

PRELIMINARY ONLY